Alcoa Fastening Systems

DATA SHEET

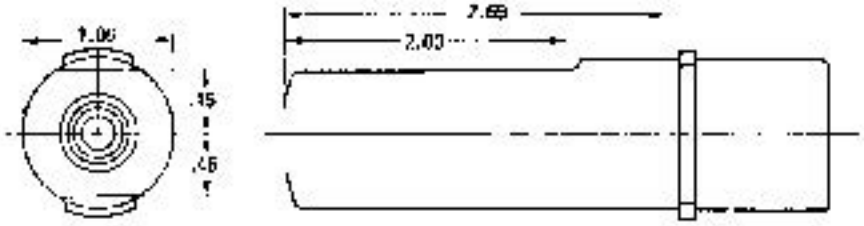

.45 in. = 11.4 mm
1.06 in. = 26.9 mm
2.00 in. = 50.8 mm
2.69 in. = 68.3 mm

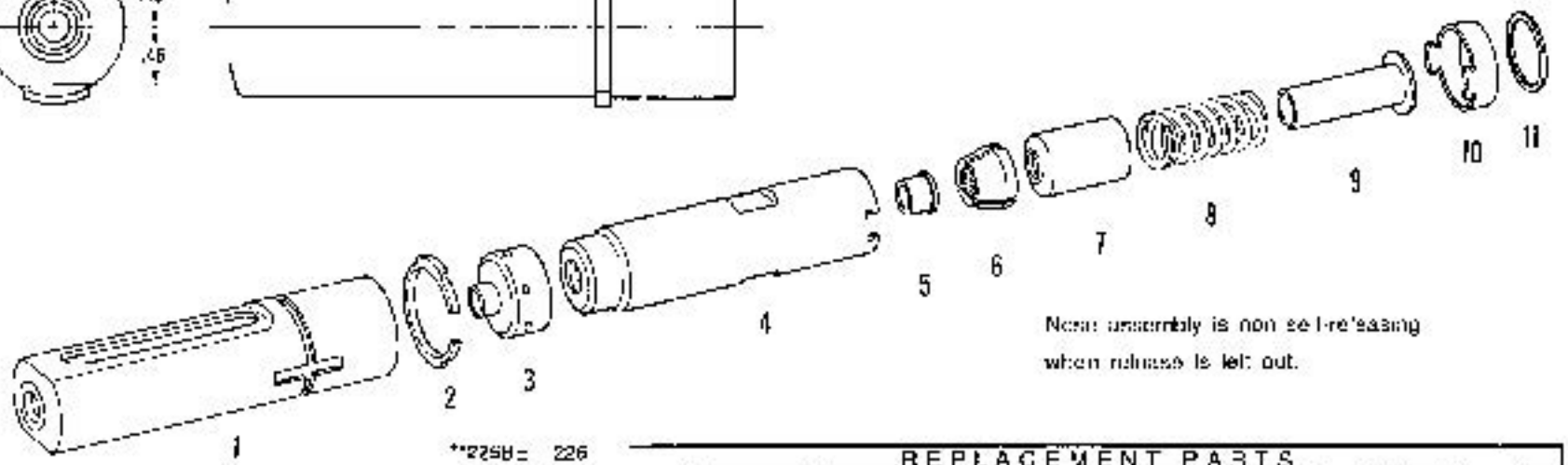

Note: assembly is non self-releasing when release is left out.

**2258 =	226
245	246
2500	247
2502	4801
2503	4802
	4803

REPLACEMENT PARTS

REF	PART NO.	REQ	DESCRIPTION
1	109935	1	Anvil (inc. 2)
2	106798	1	Retainer
3	109383	1	Ejector Collae
4	109381	1	Collet
5	109384	1	Release - Jaw
6	102550	1	Jaws (3) marked Z
7	109382	1	Follower
8	109737	1	Spring
9	84454	1	Sleeve
10	89795	1	Lock collar
11	89298	1	Shim
	109395	1	Collet Assembly (inc. 4 - 11)
	110237	1	Key - Installation

SEE OTHER SIDE FOR NOTES AND ASSEMBLY INSTRUCTIONS

99-958

NOSE ASSEMBLY

Alcoa Fastening Systems
Commercial Products
1 Corporate Drive - Kingston, NY 12401

TYPE: Rotatable; Std. Length
FOR: HUCKBOLT-08
TOOL: 353**

OTHER

PRODUCT REVISION: 11-74
REVISED: 9/19/01