REV	DESCRIPTION	DATE
A	RELEASE, FORMALLY PR2759-S	3/16/04

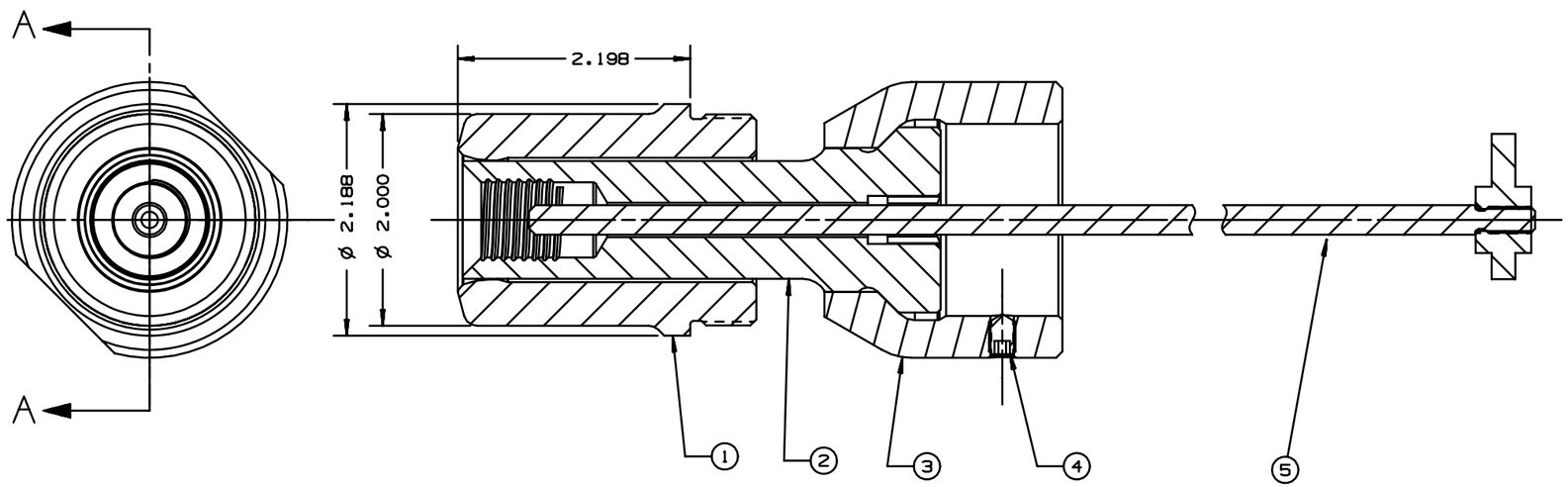

SECTION A-A

PART NO	QTY	DESCRIPTION	ITEM
127852	1	ACTUATOR ROD ASSEMBLY	5
501766	2	C.P.S.S. 1/4-28 X 3/8	4
124057	1	SPINDLE COUPLING	3
128086	1	SHORT 3/4" THIMBLE	2
128084	1	3/4" ANVIL	1

HUCK INTERNATIONAL, INC., I.S.D.
1 CORPORATE DR, P.O. BOX 2270
KINGSTON, NEW YORK 12401

NOSE ASSEMBLY
SHORT 3/4" U-SPIN

DET: TRK CK: DATE: 3/16/04 SCALE: 1:1

FOC.
FAC.

B

99-7801-S

FORM KE104 Rev C

By accepting this proprietary Huck drawing, recipient agrees not to reproduce or disclose any part thereof to any other without the written permission of Huck International, Inc.