REV	DESCRIPTION	DATE
A	RELEASE. WAS PR2104.	11/29/99

NOTES:

1. INSERTS FOR COUNTERSUNK PRODUCT OPTIONALLY AVAILABLE:
   -06 : 123406
   -08 : 125943

2. NOSE SET-UP FOR -08 PRODUCT. SHIP 125944 AND 123405 WITH NOSE IN SEPERATE BAG.

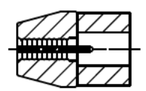

125944 UNITIZED JAWS (-06)

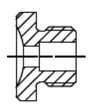

123405 INSERT
-06 TRUSS HEAD

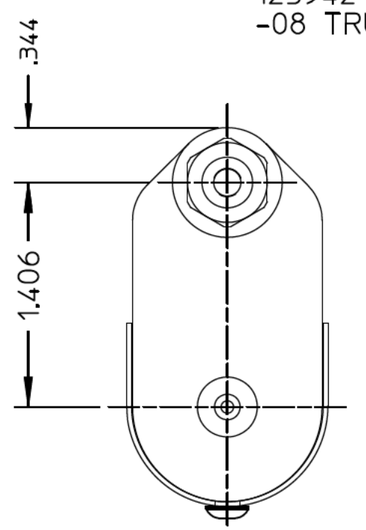

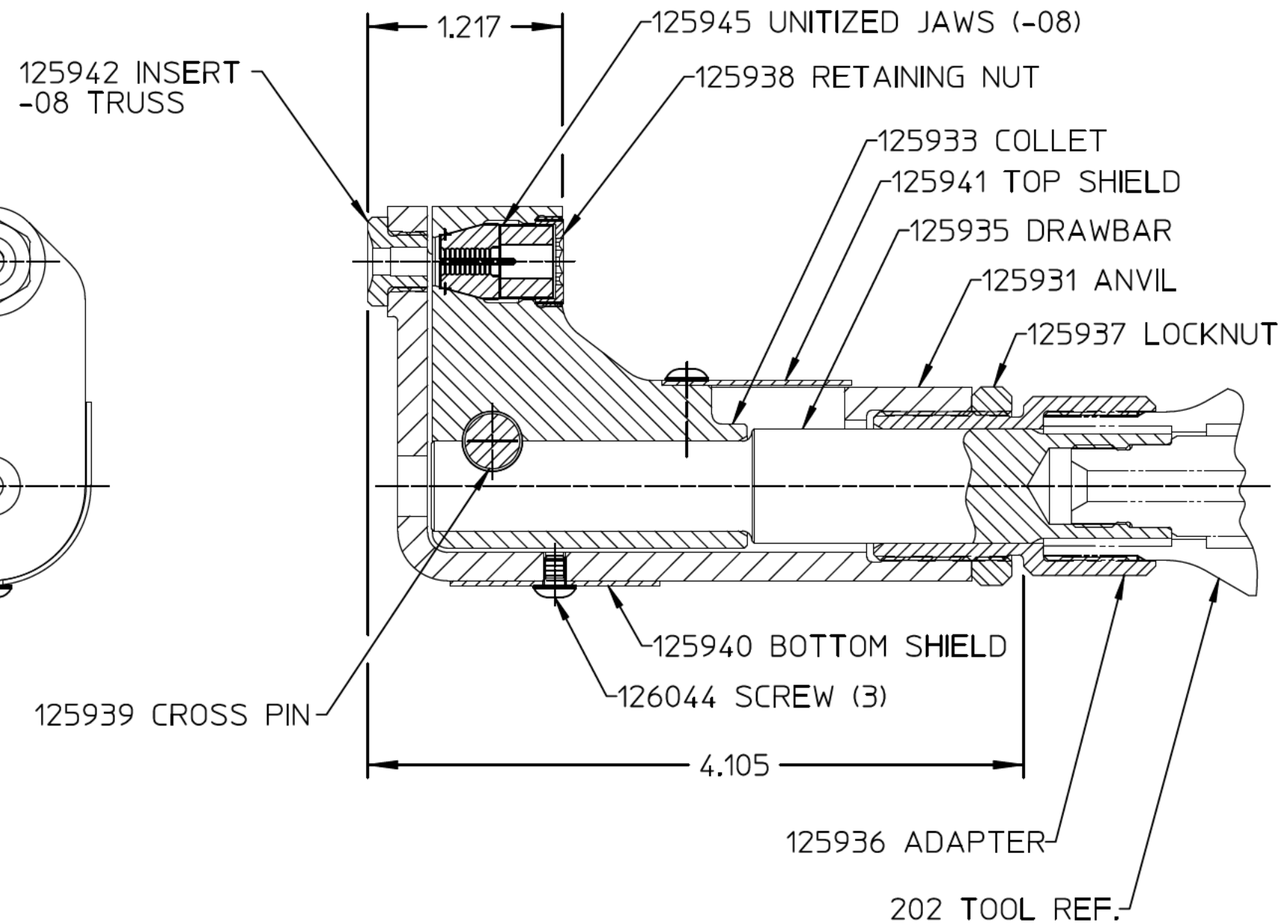

FORM: KE104 REV C

By accepting this proprietary Huck drawing, recipient agrees not to reproduce or disclose any part thereof to any others without the written permission of Huck International, Inc.

MATERIAL:	- SPEC:	TOLERANCES UNLESS OTHERWISE SPECIFIED: (ALL DIMENSIONS ARE IN INCHES)	HUCK INTERNATIONAL, INC., I.S.D. 1 CORPORATE DRIVE, P.O. BOX 2270 KINGSTON, NEW YORK 12401
HARDNESS:	- (RAW OR STOCKED STATE)		
HEAT TREAT TO:	- SPEC:	.XX, .XXX ±	OFFSET NOSE -06/-08 MGL
SURFACE TREAT:	- SPEC:	INT. COR. RADII	
SURFACE FINISH NOT TO EXCEED:	Ra	BREAK EDGES	DET: T.L. CK: DATE: 11/29/99 SCALE: 2/1
IDENTIFICATION PER SPEC 42-311:	★ ETCH	ANGLES ±	FOC. FAC. B 99-3475
SURFACES TO BE ◎, //, ⌖, ⊥, & ▱	WITHIN T.I.R.	FINAL ASSY:	