REV	DESCRIPTION	DET	DATE
A	RELEASE	HKS	02/01/17
B	508958 SPRING WAS 508917	HKS	08/04/17

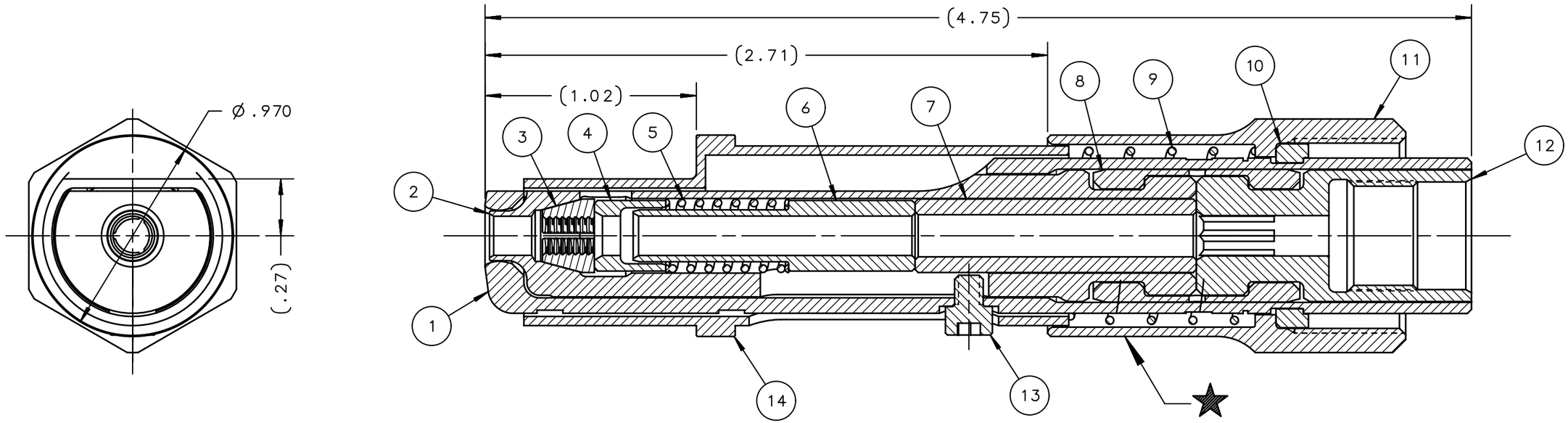

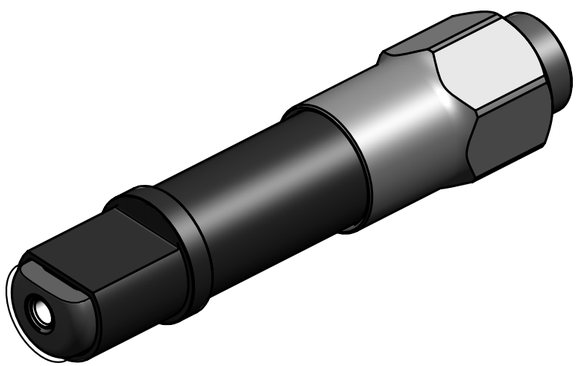

PART NO.	QTY	DESCRIPTION	ITEM
131372	1	GUARD, TELESCOPING	14
131369	1	SCREW, MACHINED	13
127515	1	ADAPTER	12
131367	1	NUT, RETAINING	11
127512	1	RING, SPLIT	10
(B) 508958	1	SPRING, COMPRESSION	9
127516	1	RING, SPLIT	8
127513	1	SPACER	7
130663	1	SLEEVE	6
508591	1	SPRING, COMPRESSION	5
130661	1	FOLLOWER	4
126588	1	CHUCK JAWS	3
127526	1	COLLET	2
127527	1	ANVIL	1

IDENTIFICATION PER SPEC 42-311: ★ PERMANENT

ITAR/ECCN: EAR99

SCH B#: 8467.99.0190

HTS: 8467.99.0190

HUCK INTERNATIONAL, INC., I.S.D
1 CORPORATE DR
KINGSTON, NEW YORK 12401

NOSE ASM W/ TELESCOPING GUARD -06 LGP

FINAL ASSY: -

ENG: NDG CK: DATE: 02/01/17 SCALE: 2:1

B **99-3474-TG**

FORM KE104 Rev F

By accepting this proprietary Huck drawing, recipient agrees not to reproduce or disclose any part therof to any other without the written permission of Huck International,Inc.