REV	DESCRIPTION	DATE
A	RELEASE	11-20-96

NOTES:

1 DIRECT MOUNT TO 228, 229 & 230 TOOLS ONLY. FOR USE WITH 225, 245, 226, 246, 247, 2502 AND 4802 TOOLS, USE WITH ADAPTER 121395.

2 TORGUE ALL THRAEDED JOINTS TO 28-32 FT/LBS.

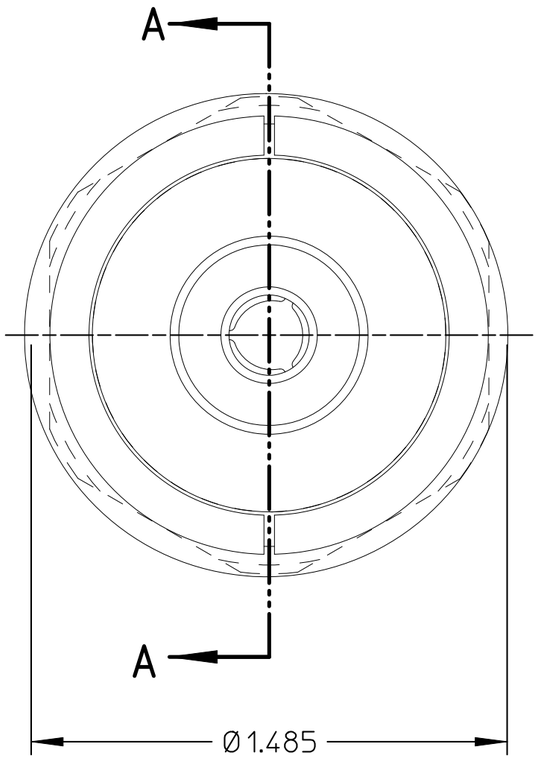

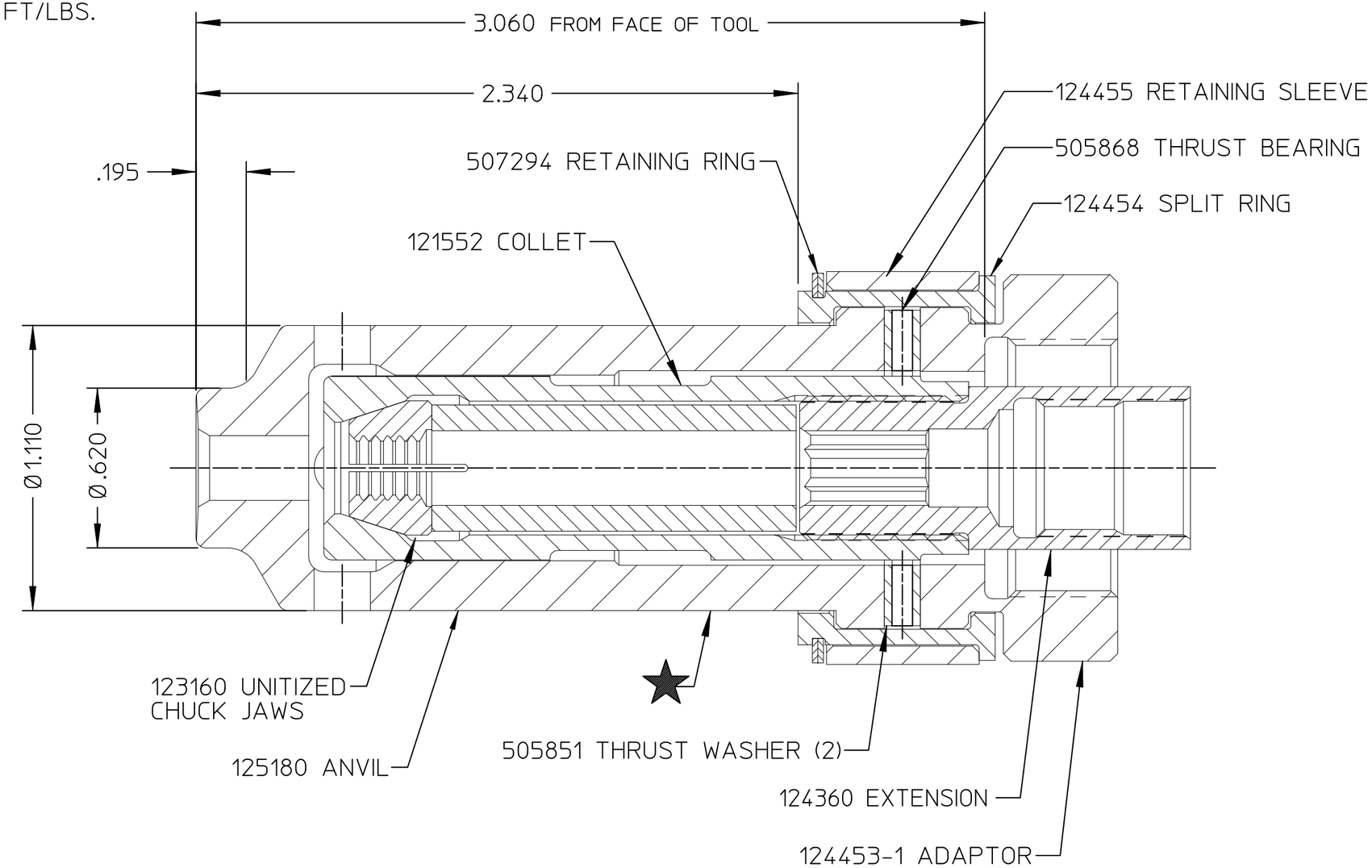

SECTION A-A

FORM: KE104 REV C By accepting this proprietary Huck drawing, recipient agrees not to reproduce or disclose any part thereof to any others without the written permission of Huck International, Inc.

MATERIAL:	- SPEC:	TOLERANCES UNLESS OTHERWISE SPECIFIED: (ALL DIMENSIONS ARE IN INCHES)	HUCK INTERNATIONAL, INC., I.S.D. 85 GRAND STREET, P.O. BOX 2270 KINGSTON, NEW YORK 12401
HARDNESS:	- (RAW OR STOCKED STATE)		
HEAT TREAT TO:	- SPEC:	.XX, .XXX ±	NOSE ASSEMBLY -12 LP CLEARANCE SLEEVE
SURFACE TREAT:	- SPEC:	INT. COR. RADII	
SURFACE FINISH NOT TO EXCEED:	Ra	BREAK EDGES	DET: T.L. CK: DATE: 11-20-96 SCALE: 2/1
IDENTIFICATION PER SPEC 42-311: ★	ETCH	ANGLES ±	FOC. FAC. B 99-3465-1
SURFACES TO BE ◎, //, ⌖, ⊥, & ▱	WITHIN T.I.R.	FINAL ASSY: 230	