REV	DESCRIPTION	DATE
A	RELEASE	04/01/13

NOTES:

1 WHEN USED WITH 210 OR 212 TOOLS, USE WITH SHIM P/N 89140 (SHIPPED IN SEPARATE BAG).

2 TORQUE ALL THREADED JOINTS TO 28-32 FT/LBS

3 ANVIL ASSEMBLY 124107 CONSISTS OF:
124106 ANVIL
124105 RATCHET PIN (2)
507166 O-RING

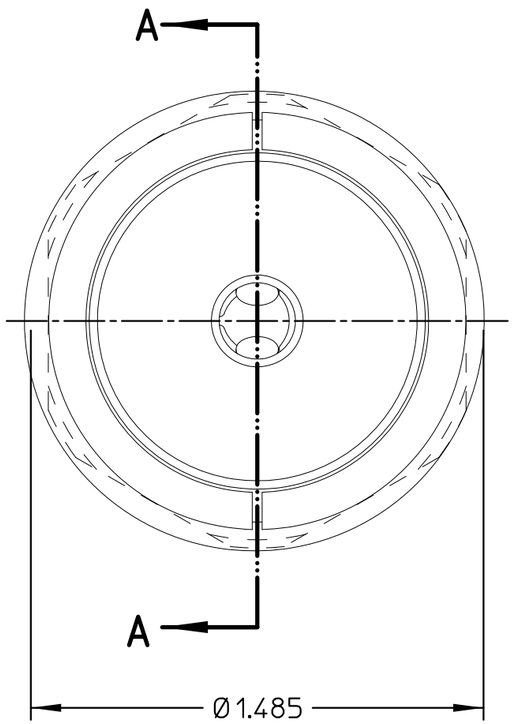

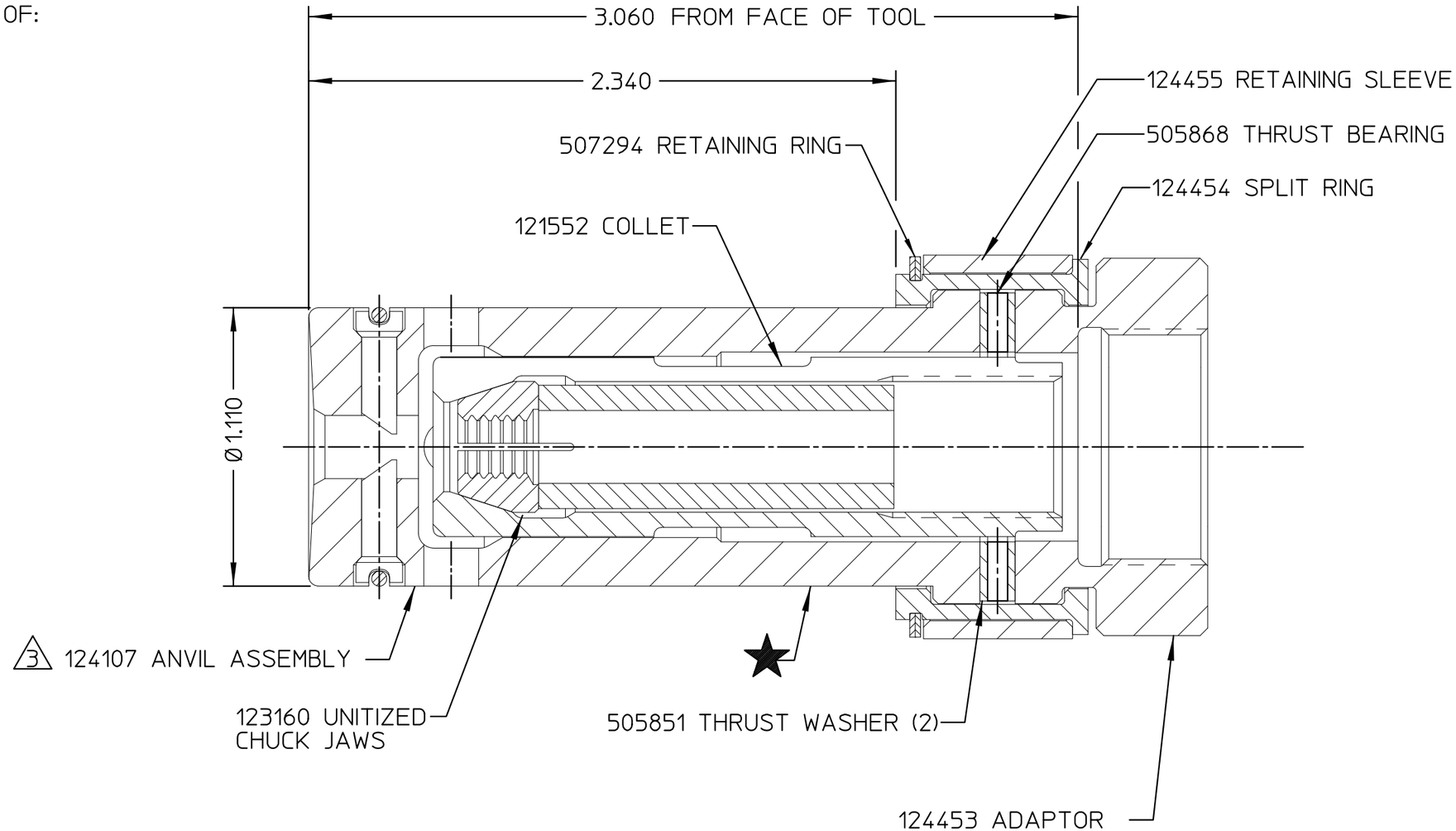

SECTION A-A

FORM: KE104 REV C By accepting this proprietary Huck drawing, recipient agrees not to reproduce or disclose any part thereof to any others without the written permission of Huck International, Inc.

MATERIAL:	- SPEC:	TOLERANCES UNLESS OTHERWISE SPECIFIED: (ALL DIMENSIONS ARE IN INCHES)	HUCK INTERNATIONAL, INC., I.S.D. 85 GRAND STREET, P.O. BOX 2270 KINGSTON, NEW YORK 12401
HARDNESS:	- (RAW OR STOCKED STATE)		
HEAT TREAT TO:	- SPEC:	.XX, .XXX ±	NOSE ASSEMBLY -12 LP
SURFACE TREAT:	- SPEC:	INT. COR. RADII	
SURFACE FINISH NOT TO EXCEED:	Ra	BREAK EDGES	DET: JJC CK: DATE:04/01/13 SCALE: 2/1
IDENTIFICATION PER SPEC 42-311: ★	ETCH	ANGLES ±	FOC. FAC. B 99-3464L
SURFACES TO BE ◎, //, ⌖, ⊥, & ▱	WITHIN T.I.R.	FINAL ASSY: 212	