REV	DESCRIPTION	DATE
A	RELEASE	02-09-96

NOTES:

1. ANVIL ASSEMBLY 125055 CONSISTS OF:
   ANVIL HOLDER ASSEMBLY 125054,
   ANVIL INSERT 119377.

2. ANVIL HOLDER ASSEMBLY 125054 CONSISTS OF:
   ANVIL HOLDER 125053 AND
   RETAINER 120737.

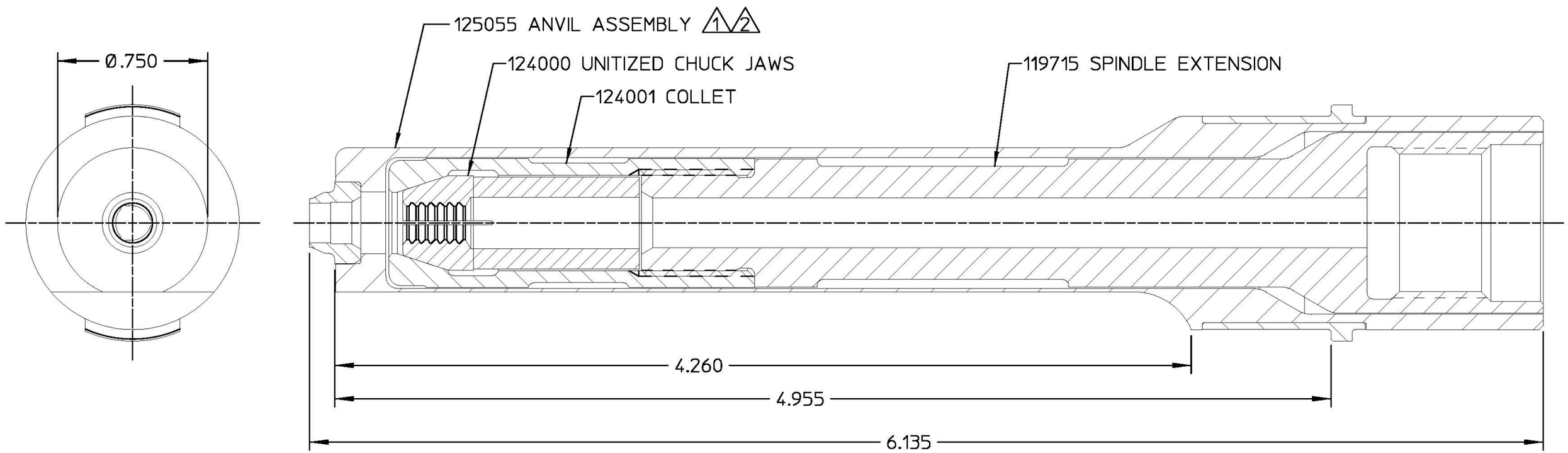

FORM: KE104 REV C By accepting this proprietary Huck drawing, recipient agrees not to reproduce or disclose any part thereof to any others without the written permission of Huck International, Inc.

MATERIAL:	-	SPEC:	
HARDNESS:	-	(RAW OR STOCKED STATE)	
HEAT TREAT TO:	-	SPEC:	
SURFACE TREAT:	-	SPEC:	
SURFACE FINISH NOT TO EXCEED:	Ra		
IDENTIFICATION PER SPEC 42-311:	★ ETCH		
SURFACES TO BE	◎, //, ⌖, ⊥, & ▱	WITHIN	T.I.R.

TOLERANCES UNLESS OTHERWISE SPECIFIED:
(ALL DIMENSIONS ARE IN INCHES)

.XX, .XXX	±
INT. COR. RADII	
BREAK EDGES	
ANGLES	±
FINAL ASSY: 353	

HUCK INTERNATIONAL, INC., I.S.D.
85 GRAND STREET, P.O. BOX 2270
KINGSTON, NEW YORK 12401

NOSE ASSEMBLY
-08 BLIND BOLT

DET: T.L.	CK:	DATE: 02-09-96	SCALE: 2/1
FOC. / FAC.	B	99-2717	