REV	DESCRIPTION	DATE
A	RELEASE	02-06-96

NOTES:

1. ANVIL ASSEMBLY P/N 125035 CONSISTS OF:
   ANVIL HOLDER ASSEMBLY 125034 AND
   ANVIL INSERT 119375

2. ANVIL HOLDER ASSEMBLY 125034 CONSISTS OF:
   ANVIL HOLDER 125033, (NOT AVAILABLE SEPARATELY) AND
   RETAINER 120737

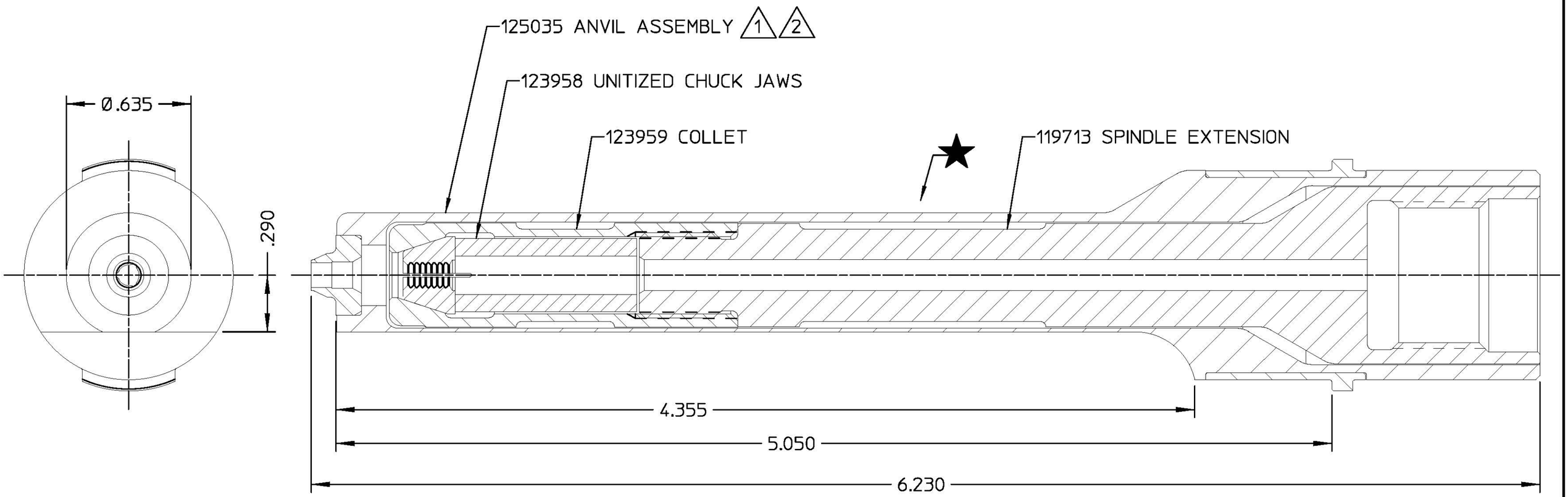

FORM: KE104 REV C By accepting this proprietary Huck drawing, recipient agrees not to reproduce or disclose any part thereof to any others without the written permission of Huck International, Inc.

MATERIAL:	-	SPEC:	
HARDNESS:	-	(RAW OR STOCKED STATE)	
HEAT TREAT TO:	-	SPEC:	
SURFACE TREAT:	-	SPEC:	
SURFACE FINISH NOT TO EXCEED:	Ra		
IDENTIFICATION PER SPEC 42-311: ★	ETCH		
SURFACES TO BE ◎, //, ⌖, ⊥, & ▱	WITHIN	T.I.R.	

TOLERANCES UNLESS OTHERWISE SPECIFIED: (ALL DIMENSIONS ARE IN INCHES)	
.XX, .XXX ±	
INT. COR. RADII	
BREAK EDGES	
ANGLES ±	
FINAL ASSY: 353	

HUCK INTERNATIONAL, INC., I.S.D.
85 GRAND STREET, P.O. BOX 2270
KINGSTON, NEW YORK 12401

NOSE ASSEMBLY
-05 BB, 353 STYLE

DET: T.L.	CK:	DATE: 02-06-96	SCALE: 2/1
FOC. FAC.	B	99-2705	