REV	DESCRIPTION	DATE
A	RELEASE	09/11/00

NOTES:

1. ANVIL ASSEMBLY 125032W CONSISTS OF:
   ANVIL HOLDER ASSEMBLY 125031 AND
   ANVIL INSERT 126266-05.

2. ANVIL HOLDER ASSEMBLY 125031 CONSISTS OF:
   ANVIL HOLDER 125030, (NOT AVAILABLE SEPARATELY),
   RETAINER 120737.

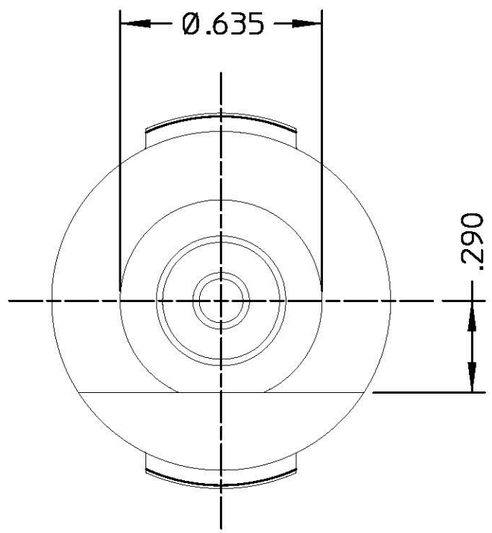

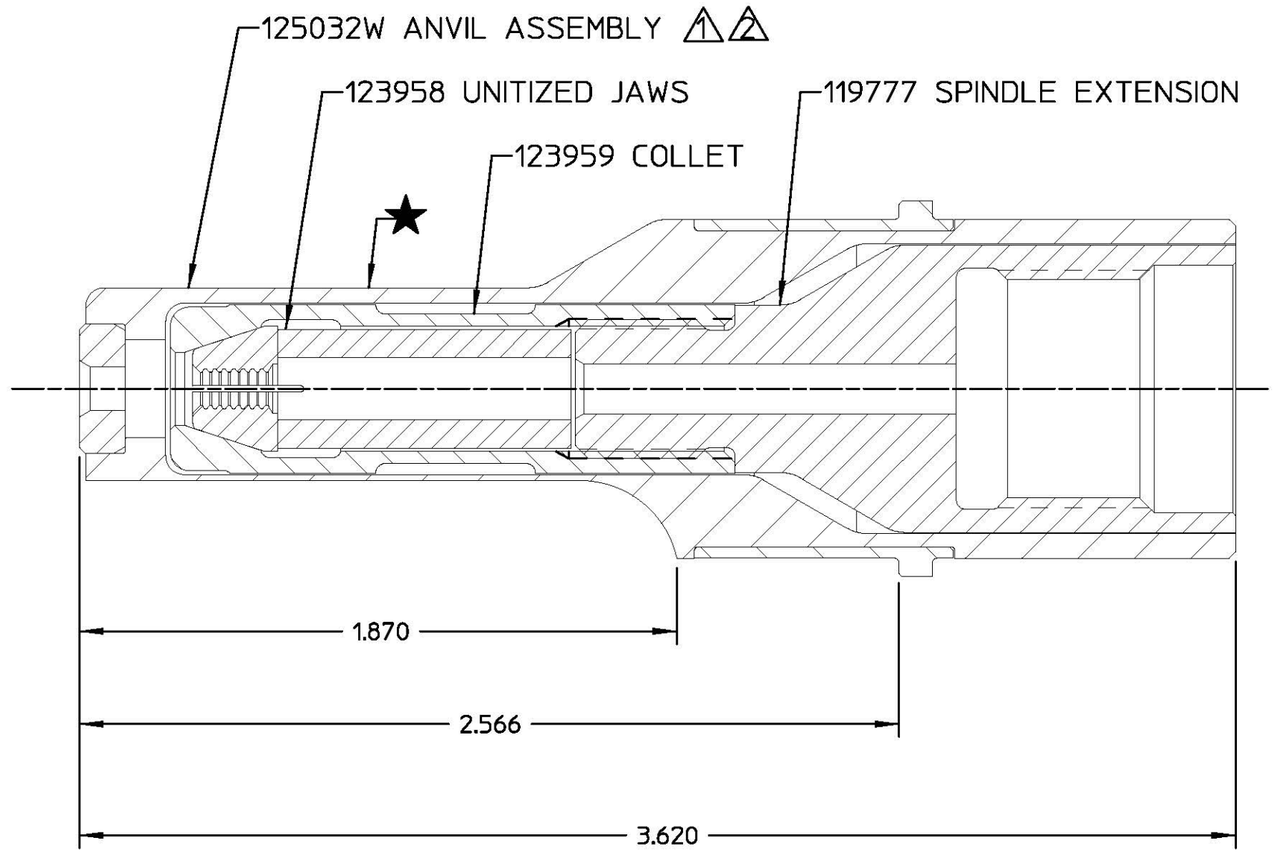

FORM: KE104 REV C By accepting this proprietary Huck drawing, recipient agrees not to reproduce or disclose any part thereof to any others without the written permission of Huck International, Inc.

MATERIAL:	-	SPEC:	
HARDNESS:	-	(RAW OR STOCKED STATE)	
HEAT TREAT TO:	-	SPEC:	
SURFACE TREAT:	-	SPEC:	
SURFACE FINISH NOT TO EXCEED:	Ra		
IDENTIFICATION PER SPEC 42-311:	★	ETCH	
SURFACES TO BE ◎, //, ⌖, ⊥, & ▱	WITHIN	T.I.R.	

TOLERANCES UNLESS OTHERWISE SPECIFIED:
(ALL DIMENSIONS ARE IN INCHES)

.XX, .XXX ±	
INT. COR. RADII	
BREAK EDGES	
ANGLES ±	
FINAL ASSY: 353	

HUCK INTERNATIONAL, INC., I.S.D.
85 GRAND STREET, P.O. BOX 2270
KINGSTON, NEW YORK 12401

NOSE ASSEMBLY
-05 BLIND BOLT

DET: WV	CK:	DATE: 09/11/00	SCALE: 2:1

FOC.
FAC.

B

99-2704W