| REV | DESCRIPTION | DATE |
|---|---|---|
| A | RELEASE | 02-06-96 |

NOTES:

1. ANVIL ASSEMBLY 125032 CONSISTS OF:
   ANVIL HOLDER ASSEMBLY 125031 AND
   ANVIL INSERT 119375

2. ANVIL HOLDER ASSEMBLY 125031 CONSISTS OF:
   ANVIL HOLDER 125030, (NOT AVAILABLE SEPARATELY),
   RETAINER 120737.

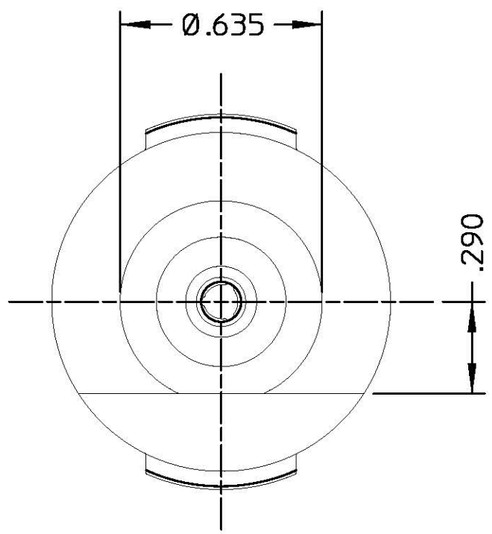


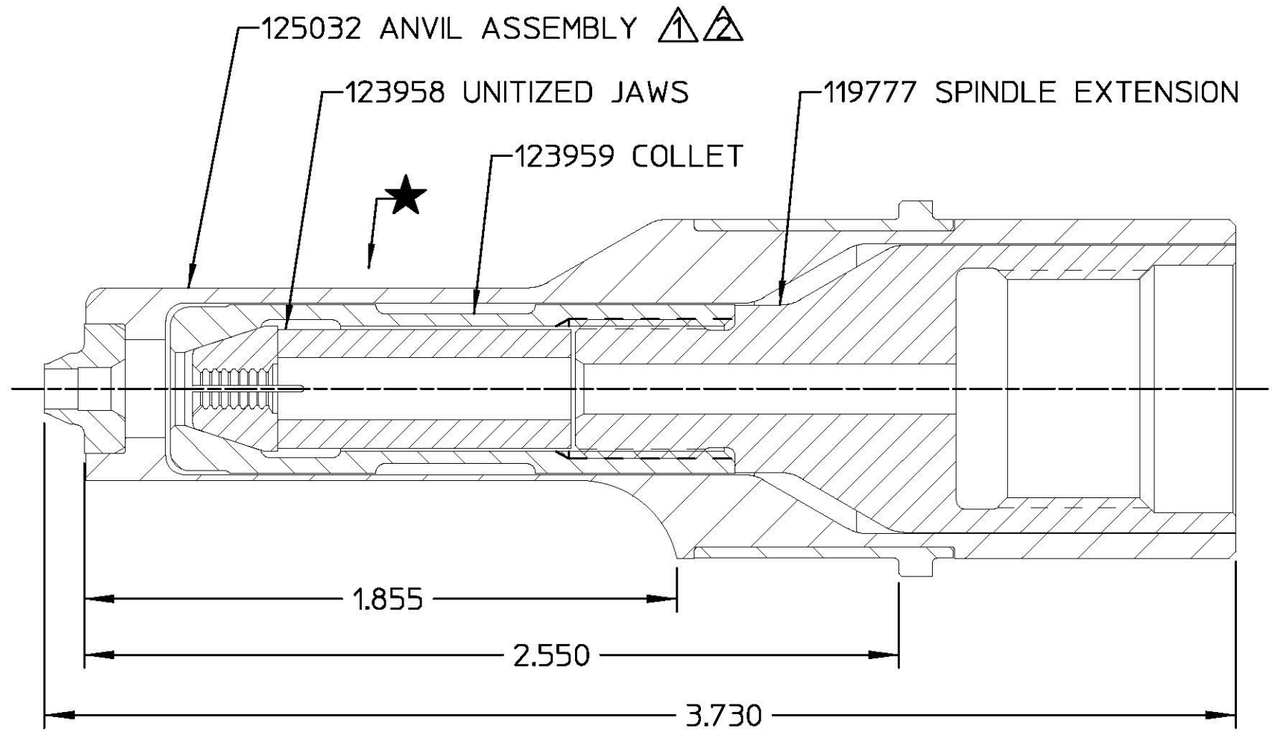


FORM: KE104 REV C By accepting this proprietary Huck drawing, recipient agrees not to reproduce or disclose any part thereof to any others without the written permission of Huck International, Inc.

| | | | |
|---|---|---|---|
| MATERIAL: | - | SPEC: | |
| HARDNESS: | - | (RAW OR STOCKED STATE) | |
| HEAT TREAT TO: | - | SPEC: | |
| SURFACE TREAT: | - | SPEC: | |
| SURFACE FINISH NOT TO EXCEED: | Ra | | |
| IDENTIFICATION PER SPEC 42-311: | ★ | ETCH | |
| SURFACES TO BE | ◎, //, ⌖, ⊥, & ▱ | WITHIN | T.I.R. |

TOLERANCES UNLESS OTHERWISE SPECIFIED:
(ALL DIMENSIONS ARE IN INCHES)

| | |
|---|---|
| .XX, .XXX ± | |
| INT. COR. RADII | |
| BREAK EDGES | |
| ANGLES ± | |
| FINAL ASSY: 353 | |

HUCK INTERNATIONAL, INC., I.S.D.
85 GRAND STREET, P.O. BOX 2270
KINGSTON, NEW YORK 12401

NOSE ASSEMBLY
-05 BLIND BOLT

| DET: T.L. | CK: | DATE: 02-06-96 | SCALE: 2/1 |
|---|---|---|---|

FOC.
FAC.

B

99-2704