REV	DESCRIPTION	DATE
A	RELEASE	09/11/00

NOTES:

1. ANVIL ASSEMBLY 125028W CONSISTS OF:
   ANVIL HOLDER ASSEMBLY 125027 AND
   ANVIL INSERT 126266-05.

2. ANVIL HOLDER ASSEMBLY 125027 CONSISTS OF:
   ANVIL HOLDER 125026, (NOT AVAILABLE SEPARATELY)
   AND RETAINER 120737.

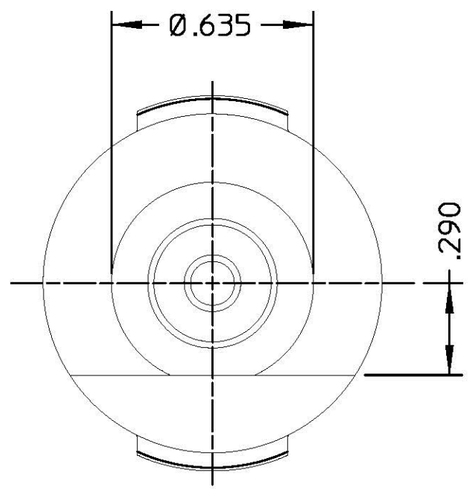

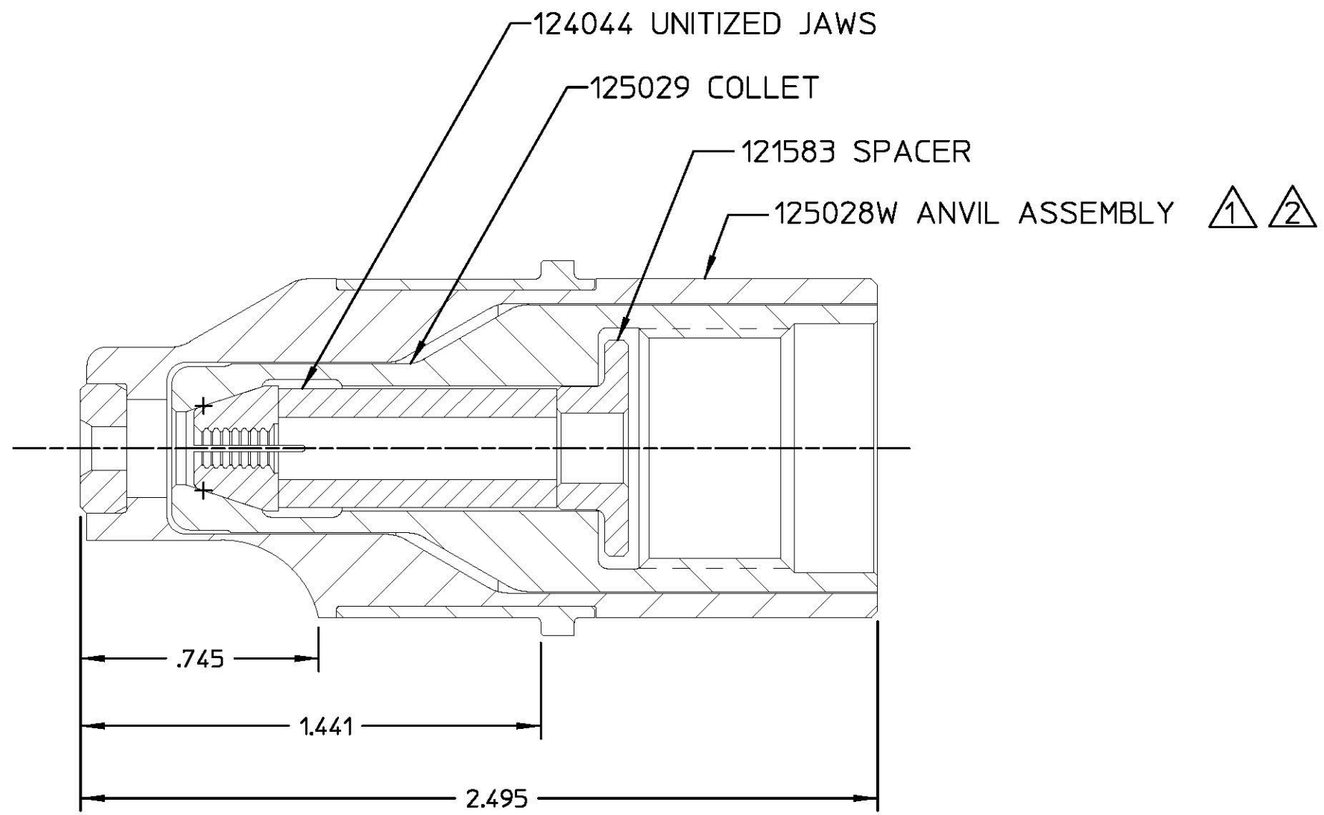

FORM: KE104 REV C By accepting this proprietary Huck drawing, recipient agrees not to reproduce or disclose any part thereof to any others without the written permission of Huck International, Inc.

MATERIAL:	-	SPEC:	TOLERANCES UNLESS OTHERWISE SPECIFIED: (ALL DIMENSIONS ARE IN INCHES)
HARDNESS:	-	(RAW OR STOCKED STATE)	
HEAT TREAT TO:	-	SPEC:	.XX, .XXX ±
SURFACE TREAT:	-	SPEC:	INT. COR. RADII
SURFACE FINISH NOT TO EXCEED:	Ra		BREAK EDGES
IDENTIFICATION PER SPEC 42-311: ★	ETCH		ANGLES ±
SURFACES TO BE ◎, //, ⌖, ⊥, & ▱	WITHIN	T.I.R.	FINAL ASSY: 353

HUCK INTERNATIONAL, INC., I.S.D.
85 GRAND STREET, P.O. BOX 2270
KINGSTON, NEW YORK 12401

NOSE ASSEMBLY
-05 BLIND BOLT

DET: WV	CK:	DATE: 09/11/00	SCALE: 2:1
FOC. FAC.	B	99-2703W	