REV	DESCRIPTION	DATE
A	RELEASE	06/22/01
B	128034 WAS 120044	01/12/06
C	129933 DRAWBAR WAS 122896	06/05/12

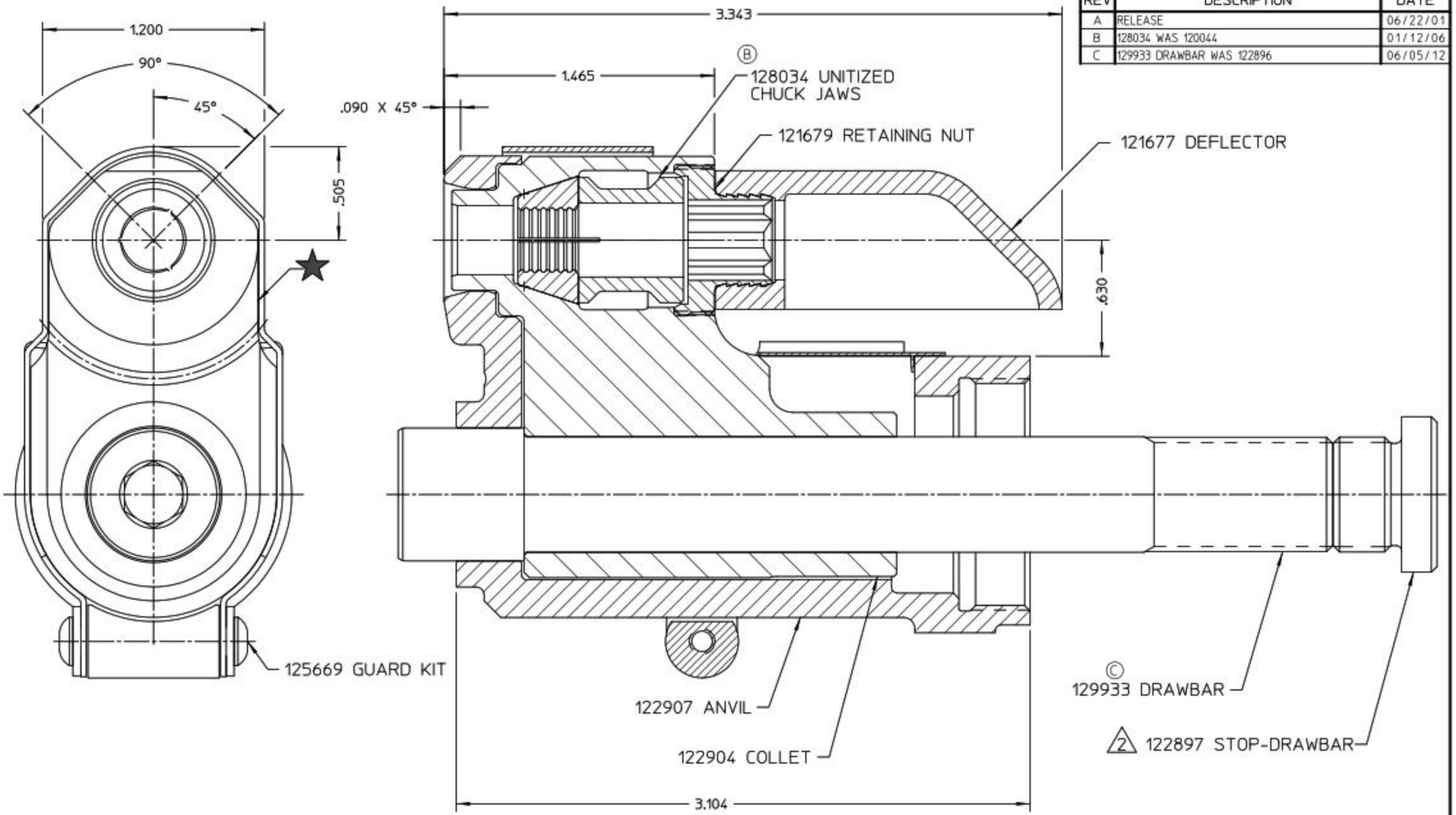

NOTES:

1 MAXIMUM RECOMMENDED STROKE: .625

2 INSTALL IN REAR OF 208-625 TOOL AND TORQUE TO 25-30 FT/LBS.

IDENTIFICATION PER SPEC 42-31: ★ CHEMICAL ETCH

HUCK INTERNATIONAL, INC., I.S.D.
1 CORPORATE DRIVE, P.O. BOX 2270
KINGSTON, NEW YORK 12401

NOSE ASSEMBLY -10 MGP

DET: CHR	CK:	DATE: 01/12/06	SCALE: 2:1
FOC. FAC.	B	99-1760DG	

FORM: KE104 REV C

By accepting this proprietary Huck drawing, recipient agrees not to reproduce or disclose any part thereof to any others without the written permission of Huck International, Inc.