REV	DESCRIPTION	DATE
F	REVISED & REDRAWN	07/09/03

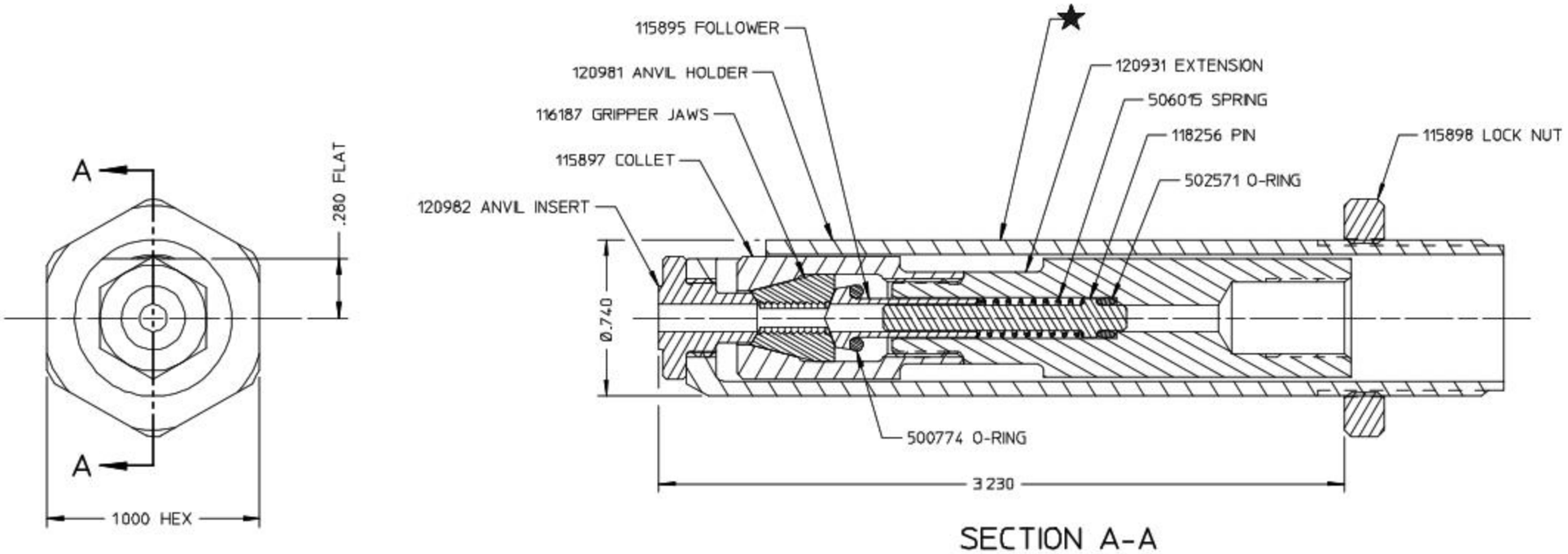

SECTION A-A

IDENTIFICATION PER SPEC 42-31% ★ ETCH

HUCK INTERNATIONAL, INC. ISD
1 CORPORATE DRIVE, P.O. BOX 2270
KINGSTON, NEW YORK 12401

EXTENDED HUCK CLINCH
NOSE ASSEMBLY

DET WV	CK -	DATE 07/09/03	SCALE 2/1
FOC FAC	B	99-1335	

FORM KE104 REV C By accepting this proprietary Huck drawing, recipient agrees not to reproduce or disclose any part thereof to any others without the written permission of Huck International, Inc